創新 INNOVATION
誠信 INTEGRITY
品質 QUALITY

蘇錦工業有限公司 Su Zin Industry Co., Ltd.

ADD | 429台中市神岡區大富路61巷96號
No.96, Ln. 61, Dafu Rd., Shengang Dist., Taichung City 429, Taiwan
TEL | +886 4-2522-6049 / +886 4-2526-7219
FAX | +886 4-2523-1065
E-MAIL | service@sute.com.tw
www.sute.com.tw

SU TE 蘇鐵精機

SU ZIN 蘇鐵機械

蘇錦工業有限公司
Su Zin Industry Co., Ltd.

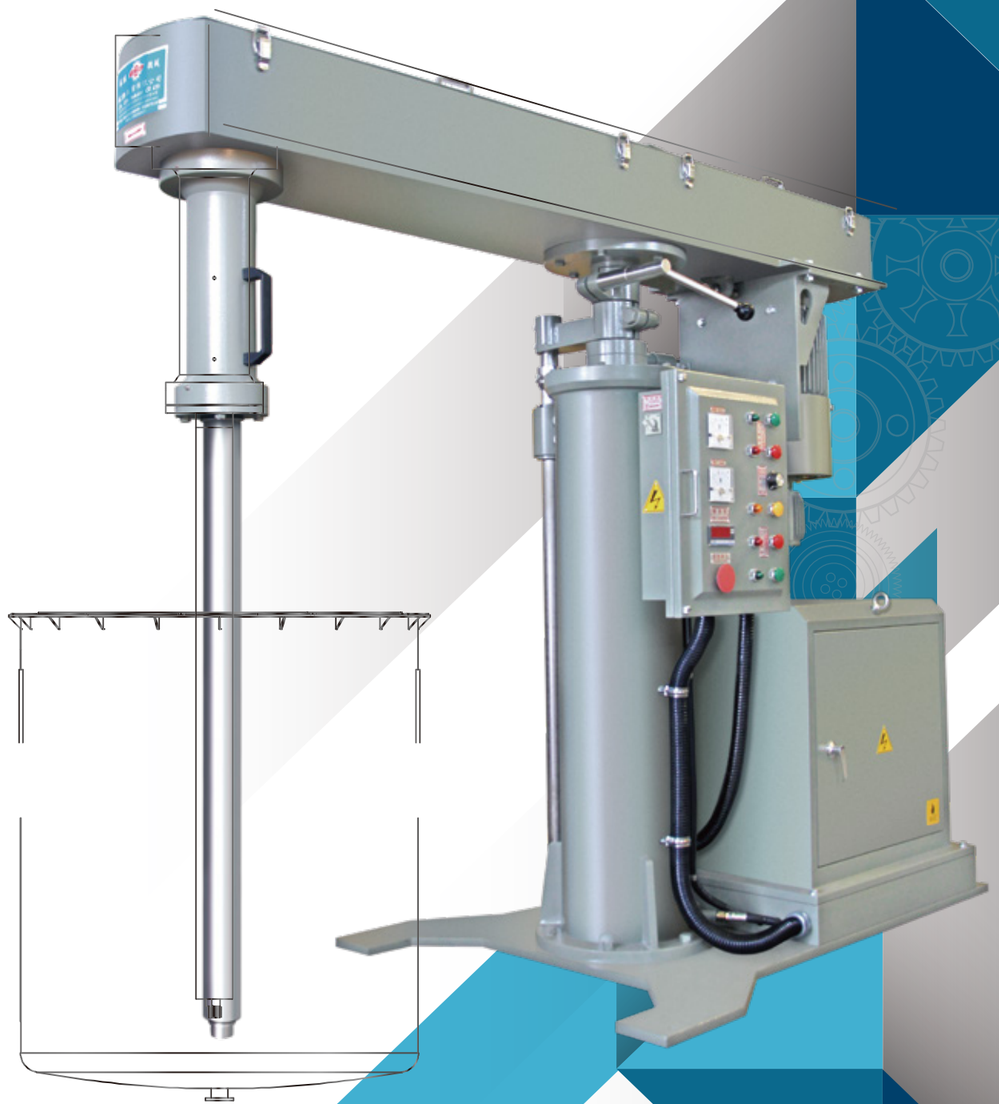

食品 Food | 家具塗料 Furniture Coating | 金屬漿料 Meal Paste | 接著劑 Sealing

客製化 Customization | 建築塗料 Architectural Coatings | 化妝品 Cosmetic | 金屬烤漆 Baking Paint | 油墨 Printing Ink

201908

公司簡介 Company Profile

創新 INNOVATION
誠信 INTEGRITY
品質 QUALITY

本公司從1970年開始從事化工設備生產至今已將近半個世紀，由蘇鐵工業社、蘇鐵工廠到蘇錦工業有限公司，設備早期以製造反應槽為主，大約1980至今專注在攪拌機以及濕式研磨機、球磨機、過濾機的生產製造，在國內外有無數的廠商支持，日後將再朝更多元化的方向發展，除了原有油漆、油墨、樹酯、化妝品行業之外，期許可以朝電子漿料、醫藥食品等方向發展。

蘇錦重視產品可靠度，也希望可以依照客戶不同產品的製程需求，提升設備性能，協助客人嚴格管控產品品質。我們將以持續創新的精神、維持品質的一貫、要求誠信的態度，服務我們的客戶。

Since 1970, Su Zin Industry Co., Ltd. (SU TE) has been engaged in the production of chemical equipment for nearly half a century with through different business transformation.

Our products are been mainly applied to the manufacture of reaction tanks. We focused on mixers and wet grinding after 1980. The product of ball mills and filters successfully help our clients to fulfil its manufacturing requirement in Taiwan market and worldwide.

We aimed for diversified development for company strategy and focused on industrial of paint, ink, resin, and cosmetics in the past. We expect to involve in electronic paste, medical equipment, and food manufacturing in the nearly future.

Su Zin Industry Co., Ltd. produce our equipment with high reliability and provide after sales service to customers. Meanwhile, the facility could be customized by individual production request to improve its productivity efficiency accordingly.

We serve all our customers with a spirit of continuous innovation, consistent quality, and a commitment to integrity.

無段變速攪拌機 STP-3
Continuous Variable Speed Mixer

無段變速攪拌機 STP-50(E)
Continuous Variable Speed Mixer

- 攪拌機附攪拌桶迴轉功能(為高黏度設計)
  Speed Less Mixer With Tank Rotation System
  (Design for high CPS material)

研磨預拌混合槽 SQ-200
Mixing Tank Pre-gringing

立式砂磨機 SL-300(E)
Vertical Type Grinding Machine

油槽 (15KL)
Oil Tank (15KL)

客製化攪拌桶
Customized Mixing Tank

- 特殊設計輕巧好推
  Special design for Easy Movement

無段變速攪拌機 Continuous Variable Speed Mixer

STP-5 & STP-7 & STP-10

型號 Model	設備尺寸 Equipment Dimension (mm)						
	H	W	H1	L	A	H2	H3
STP-5	1840	620	125	1620	580	1125	2840
STP-5(E)	1840	620	125	1620	580	1125	2840
STP-7	1840	620	125	1720	695	1125	2840
STP-7(E)	1840	620	125	1720	695	1125	2840
STP-10	1955	700	115	1950	740	1165	3005
STP-10(E)	1955	700	115	1950	740	1165	3005

機身材質	鐵 (選配不鏽鋼 SUS304)
主軸馬達	防爆馬達
油壓馬達	1HP
油壓缸	實心雙動油壓缸 (可靠度高)
葉片/軸心	不鏽鋼 (SUS304)
選配	閉式電器箱與金屬按鈕 (增加安全性)
•	人機介面 (方便操作與資料收集)
•	夾桶器
•	不鏽鋼機身 SUS 304 or SUS 316 (適合化妝品、食品與水性相關產品使用)
•	自動升降系統 (操作過程增加攪拌均勻度)
•	溫度控制模組 (達到攪拌過程溫度控制)
•	高精度轉速控制 (可以達到正負3rpm)

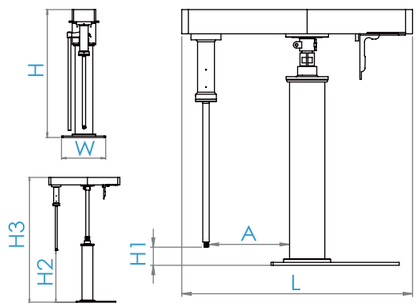

型號 Model	重量 Weight (kg)	功率 Power		轉速 R.P.M	攪拌葉片 Mixing Arm (mm)		切線速度 Tangential Velocity (m/s)
		馬力HP	千瓦 KW		A	B	
STP-5	730	5	3.75	1200	140	210	13.2
STP-5(E)	760	5	3.75	1200	140	210	13.2
STP-7	790	7	5.25	1200	140	250	15.7
STP-7(E)	820	7	5.25	1200	140	250	15.7
STP-10	874	10	7.5	1200	140	280	17.6
STP-10(E)	904	10	7.5	1200	140	280	17.6

Machine Material	Iron (Option: SUS304)
Major Motor	Explosion-Proof Motor
Hydraulic Motor	1HP
Hydraulic Cylinder	Jacking Rams / Double-Acting (with Higher Reliability)
Agitator Shaft/Mixing Arm	Stainless Steel (SUS304)
Options	Airtight Electrical Cabinet with Metal Switch (Increase Security)
•	Human Machine Interface (Easy - Operation and Data Collection)
•	Drum Handlers
•	Machine Material SUS 304 or SUS 316 (Suitable for Cosmetic, Food and Water Based Products)
•	Auto Lifting System (Increase Mixing Uniformity during Operation)
•	Temperature Control System
•	High - Precision Speed Control System (+/- 3rpm)

無段變速攪拌機 Continuous Variable Speed Mixer

STP-15 ~ STP-60

型號 Model	設備尺寸 Equipment Dimension (mm)						
	H	W	H1	L	A	H2	H3
STP-15	2000	1120	115	2420	950	1215	3000
STP-15(E)	2075	1120	190	2420	950	1290	3075
STP-20	2000	1120	115	2420	950	1215	3000
STP-20(E)	2075	1120	190	2420	950	1290	3075
STP-25	2345	1200	160	2560	1000	1360	3545
STP-25(E)	2420	1200	235	2560	1000	1435	3620
STP-30	2345	1200	160	2560	1000	1360	3545
STP-30(E)	2420	1200	235	2560	1000	1435	3620
STP-50	2632	1300	135	2560	1000	1435	3932
STP-50(E)	2707	1300	210	2560	1000	1510	4007
STP-60	2632	1300	135	2560	1000	1435	3932
STP-60(E)	2707	1300	210	2560	1000	1510	4007

機身材質	鐵 (選配不鏽鋼 SUS304)
主軸馬達	防爆馬達搭配強制散熱風扇
油壓馬達	2HP~5HP
油壓缸	實心雙動油壓缸 (可靠度高)
葉片/軸心	不鏽鋼(SUS304)
選配	閉式電器箱與金屬按鈕 (增加安全性)
•	人機介面 (方便操作與資料收集)
•	夾桶器
•	不鏽鋼機身SUS 304 or SUS 316 (適合化妝品、食品與水性相關產品使用)
•	自動升降系統 (操作過程增加攪拌均勻度)
•	溫度控制模組 (達到攪拌過程溫度控制)
•	高精度轉速控制 (可以達到正負3rpm)
•	攪拌桶迴轉功能 (專為高黏度產品設計)

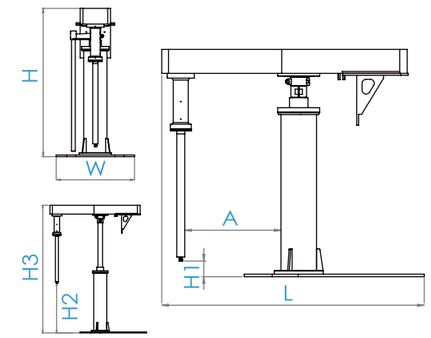

型號 Model	重量 Weight (kg)	功率 Power		轉速 R.P.M	攪拌葉片 Mixing Arm (mm)		切線速度 Tangential Velocity (m/s)
		馬力 HP	千瓦 KW		A	B	
STP-15	1400	15	11.25	1200	250	310	19.5
STP-15(E)	1750	15	11.25	1200	250	310	19.5
STP-20	1700	20	15	1200	250	325	20.4
STP-20(E)	2050	20	15	1200	250	325	20.4
STP-25	1950	25	18.75	1200	310	365	22.9
STP-25(E)	2350	25	18.75	1200	310	365	22.9
STP-30	2000	30	22.5	1200	325	365	22.9
STP-30(E)	2400	30	22.5	1200	325	365	22.9
STP-50	2500	50	37.5	1200	325	385	24.2
STP-50(E)	2900	50	37.5	1200	325	385	24.2
STP-60	3200	60	45	1200	365	410	25.8
STP-60(E)	3600	60	45	1200	365	410	25.8

Machine Material	Iron (Option: SUS304)
Major Motor	Explosion - Proof Motor with Cooling Fan
Hydraulic Motor	2HP ~ 5HP
Hydraulic Cylinder	Jacking Rams / Double - Acting (with Higher Reliability)
Agitator Shaft / Mixing Arm	Stainless Steel (SUS304)
Options	Airtight Electrical Cabinet with Metal Switch (Increase Security)
•	Human Machine Interface (Easy - Operation and Data Collection)
•	Drum Handlers
•	Machine Material SUS 304 or SUS 316 (Suitable for Cosmetic, Food and Water Based Products)
•	Auto Lifting System (Increase Mixing Uniformity during Operation)
•	Temperature Control System
•	High - Precision Speed Control System (+/- 3rpm)
•	Tank Rotation System (Design for High Viscosity Material)

不鏽鋼無段變速攪拌機
Stainless Continuous Variable Speed Mixer

STPS-7

型號 Model	設備尺寸 Equipment Dimension (mm)						
	H	W	H1	L	A	H2	H3
STPS-7	1508	710	95	1942	493	695	2108

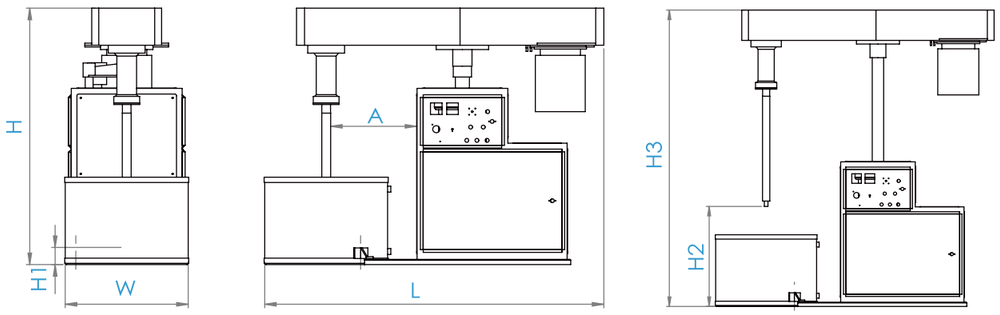

機身材質	SUS304
主軸馬達	防爆馬達
油壓馬達	1HP
油壓缸	實心雙動油壓缸 (可靠度高)
葉片/軸心	SUS304
冷卻槽	SUS304冷卻槽
選配	人機介面 (方便操作與資料收集) • 不鏽鋼機身 SUS 316 (適合化妝品、食品與水性相關產品使用) • 自動升降系統 (操作過程增加攪拌均勻度) • 溫度控制模組 (達到攪拌過程溫度控制) • 高精度轉速控制 (可以達到正負3rpm)

Machine Material	SUS304
Major Motor	Explosion - Proof Motor
Hydraulic Motor	1HP
Hydraulic Cylinder	Jacking Rams / Double - Acting (with Higher Reliability)
Agitator Shaft / Mixing Arm	Stainless Steel (SUS304)
Cooling	SUS304 Cooling Tank
Options	Human Machine Interface (Easy - Operation and Data Collection) • Machine Material SUS 316 (Suitable for Cosmetic, Food and Water Based Products) • Auto Lifting System (Increase Mixing Uniformity during Opreation) • Temperature Control System • High-Precision Speed Control System (+/- 3rpm)

型號 Model	重量 Weight (kg)	功率 Power		轉速 R.P.M	攪拌葉片 Mixing Arm(mm)		切線速度 Tangential Velocity (m/s)
		馬力 HP	千瓦 KW		A	B	
STPS-7	530	7.5	5.25	1200	140	250	15.7

穿越式防爆型攪拌機
Inter-Floor Explosion Proof Continuous Variable Speed Mixer

STPF-100(E)

型號 Model	設備尺寸 Equipment Dimension (mm)				
	H	W	H1	L	H2
STPF-100(E)	715	5795	3085	5795	5685

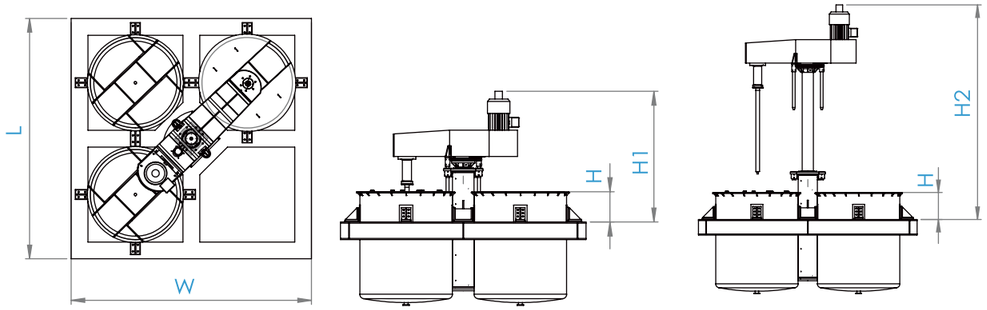

機身材質	鐵
主軸馬達	防爆馬達搭配強制散熱風扇
油壓馬達	5HP
油壓缸	實心雙動油壓缸 (可靠度高)
葉片/軸心	不鏽鋼 (SUS304)
內建	3個緊急停止開關在桶槽邊 (增加安全性)
•	4個極限感測器 (增加安全性)
•	閉式電器箱與金屬按鈕 (增加安全性)
•	自動升降系統 (操作過程增加攪拌均勻度)
•	換桶攪拌自動定位
•	桶槽秤重系統 (量測投入物料重量)
選配	人機介面 (方便操作與資料收集)
•	溫度控制模組 (達到攪拌過程溫度控制)
•	高精度轉速控制 (可以達到正負3rpm)

Machine Material	Iron
Major Motor	Explosion - Proof Motor with Cooling Fan
Hydraulic Motor	5HP
Hydraulic Cylinder	Jacking Rams / Double - Acting (with Higher Reliability)
Agitator Shaft / Mixing Arm	Stainless Steel (SUS304)
Build -In	With 3 EMO Switch Around Tank (Increase Security)
•	With 4 Limit Sensors (Increase Security)
•	Airtight Electrical Cabinet with Metal Switch (Increase Security)
•	Auto Lifting System (Increase Mixing Uniformity during Operation)
•	Auotmation of Tank Alignment
•	Tank Weighing System (Weighing the Input Material)
Options	Human Machine Interface (Easy - Operation and Data Collection)
•	Temperature Control System
•	High - Precision Speed Control System (+/- 3rpm)

型號 Model	重量 Weight (kg) 不含桶槽 without Tank	功率 Power		攪拌桶大小 Tank Size (Liter)	攪拌桶數量 Tank Quantity	轉速 R.P.M	攪拌葉片 Mixing Arm (mm)	切線速度 Tangential Velocity (m/s)
		馬力 HP	千瓦 KW				A	
STPF-100(E)	6302	100	75	8000	3	1200	600	37.70

穿越固定式防爆型攪拌機
Inter-Floor Fix Type Explosion Proof Continuous Variable speed Mixer

STDF-100(E)

型號 Model	設備尺寸 Equipment Dimension (mm)				
	W	L	H	H1	H2
STDF-100(E)	4438	5180	900	3266	6398

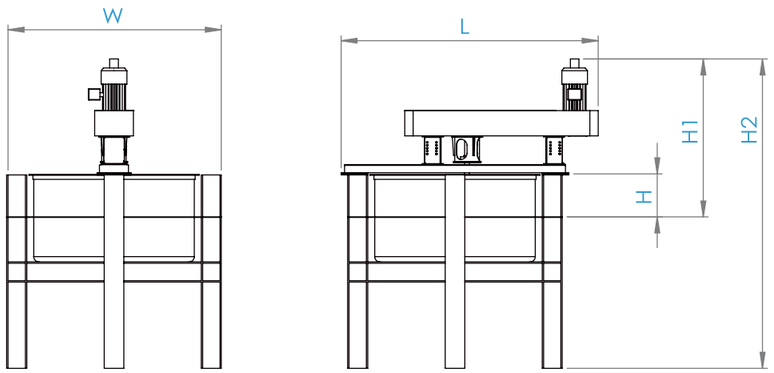

機身材質	鐵
主軸馬達	防爆馬達搭配強制散熱風扇
葉片/軸心	不鏽鋼
內建	閉式電器箱與金屬按鈕 (增加安全性)
•	桶槽秤重系統 (量測投入物料重量)
選配	人機介面 (方便操作與資料收集)
•	溫度控制模組 (達到攪拌過程溫度控制)
•	高精度轉速控制 (可以達到正負3rpm)

Machine Material	Iron
Major Motor	Explosion - Proof Motor with Cooling Fan
Agitator Shaft / Mixing Arm	Stainless Steel (SUS304)
Build -In	Airtight Electrical Cabinet with Metal Switch (Increase Security)
•	Tank Weighing System (Weighing the Input Material)
Options	Human Machine Interface (Easy - Operation and Data Collection)
•	Temperature Control System
•	High - Precision Speed Control System (+/- 3rpm)

型號 Model	重量 Weight (kg) 不含桶槽 without Tank	功率 Power		攪拌桶大小 Tank Size (Liter)	轉速 R.P.M	攪拌葉片 Mixing Arm (mm)	切線速度 Tangential Velocity (m/s)
		馬力 HP	千瓦 KW			A	
STDF-100(E)	4632	100	75	12000	1200	620	38.96

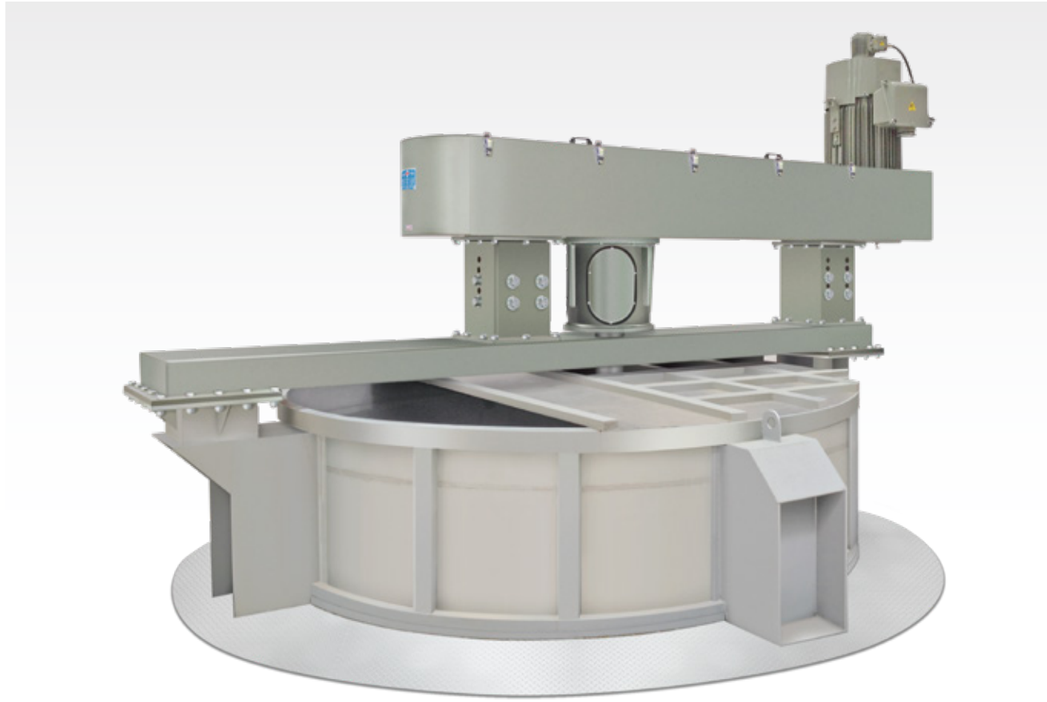

立式砂磨機 Vertical Type Grinding Machine

SL-150 ~ SL-300

型號 Model	設備尺寸 Equipment Dimension (mm)		
	H	W	L
SL-150	1720	876	1260
SL-150(E)	1720	876	1260
SL-300	2180	1016	1480
SL-300(E)	2180	1016	1480

機身材質	鐵
主軸馬達	防爆馬達
內建	可調整間隙分離系統 (低成本高可靠度)
•	溫度控制系統 (控制品質)
•	運轉時數控制器 (控制品質)
•	異常停機蜂鳴器提醒 (生產效率)
•	ARO-1 Inch 雙隔膜幫浦
選配	閉式電器箱與金屬按鈕 (增加安全性)
•	人機介面 (方便操作與資料收集)
•	不鏽鋼研磨缸以及刀片
	(適合化妝品與水性相關產品使用)

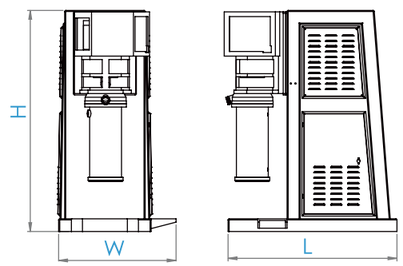

型號 Model	重量 Weight (kg)	功率 Power		研磨缸 Tank Capacity (Liter)	切線速度 Tangential Velocity (m/s)	磨球大小 Milling Media Size (mm)
		馬力 HP	千瓦 KW			
SL-150	846	20	15	15	9.00	0.6-2.5
SL-150(E)	1050	20	15	15	9.00	0.6-2.5
SL-300	1418	50	37.5	30	9.42	0.6-2.5
SL-300(E)	1628	50	37.5	30	9.42	0.6-2.5

Machine Material	Iron
Major Motor	Explosion-Proof Motor
Build -In	Gap of Agitator - Shaft Adjustable System (Entry Grade with Reliability)
•	Temperature Control System (Quality Control)
•	Counting Running Hours (Quality Control)
•	Abnormal Shut Down Alarm (Increase Productivity)
•	ARO - 1 Inch Double Diaphragm Pump
Options	Airtight Electrical Cabinet with Metal Switch (Increase Security)
•	Human Machine Interface (Easy - Operation and Data Collection)
•	Stainless Steel Granding Tank and Blade
	(Suitable for Cosmetic and Water Based Products)

立式球磨機 Vertical Type Wet Ball Mill

SO-300

型號 Model	設備尺寸 Equipment Dimension (mm)			
	H	W	W1	L
SO-300	2962	1270	1491	1040
SO-300(E)	2962	1270	1576	1040

機身材質	鐵
主軸馬達	防爆馬達搭配賽區樂減速機
內建	溫度控制系統 (控制品質)
•	定時循環系統 (控制品質)
•	ARO - 1 Inch 雙隔膜幫浦
選配	閉式電器箱與金屬按鈕 (增加安全性)
•	人機介面 (方便操作與資料收集)

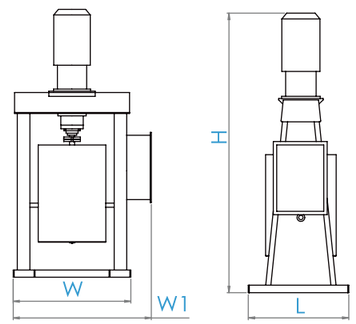

型號 Model	重量 Weight (kg)	功率 Power		研磨缸 Tank Capacity (Liter)	切線速度 Tangential Velocity (m/s)	磨球大小 Milling Media Size (mm)
		馬力 HP	千瓦 KW			
SO-300	1729	30	22.5	300	3.96	6.0-12.0
SO-300(E)	1824	30	22.5	300	3.96	6.0-12.0

Machine Material	Iron
Major Motor	Explosion-Proof Motor with Cyclo Gearmotors
Build -In	Temperature Control System (Quality Control)
•	Timing Cycle System (Quality Control)
•	ARO - 1 Inch Double Diaphragm Pump
Options	Airtight Electrical Cabinet with Metal Switch (Increase Security)
•	Human Machine Interface (Easy - Operation and Data Collection)

研磨介質 Grinding Medium

A級瑪瑙	
粒徑	8mm~10mm
莫氏硬度	≥7
密度	2.60-2.70 g/cm3
說明	天然寶石耐磨堅韌適合球磨機使用，真圓度B級瑪瑙較高，不易受推擠破裂

A-Grade Agate	
Size	8mm~10mm
Hardness according to Mohs	≥7
Density	2.60-2.70 g/cm3
Description	Nature stone with wear-resistaince. B-grade Agate with better circularity The circularity of B grade is better and it is not easy to crash during the operation

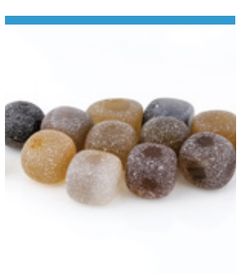

B級瑪瑙	
粒徑	8mm~10mm
莫氏硬度	≥7
密度	2.60-2.70 g/cm3
說明	天然寶石耐磨堅韌適合與A級瑪瑙混合使用

B-Grade Agate	
Size	8mm~10mm
Hardness according to Mohs	≥7
Density	2.60-2.70 g/cm3
Description	Nature stone with wear-resistaince. Suitable to mix with A-grade Agate for better performance

鉻鋼珠	
粒徑	1.0mm& 2.0mm & 8.0mm
硬度	58~64 HRC
密度	7.833g/cm3
說明	硬度高，耐磨，適合乾式與濕式研磨使用

Chrome Steel Ball	
Size	8mm~10mm
Hardness	58~64 HRC
Density	7.833g/cm3
Description	High Hardness, Wear-resistance, suitable for dry, Wet mill

玻璃珠	
粒徑	2.0mm~2.5mm & 2.5mm-3.0mm & 11mm
莫氏硬度	≥6
密度	2.59g/cm3
堆積密度	1.59g/cm3
說明	經濟便宜，適合濕式研磨以及過濾使用

Glass Beads	
Size	2.0mm~2.5mm & 2.5mm-3.0mm & 11mm
Hardness according to Mohs	≥6
Density	2.59g/cm3
Bulk Density	1.59g/cm3
Description	Suitable for wet grinding and filtration

ZS矽酸鋯珠	
粒徑	0.6mm & 0.8mm & 1.0mm & 1.2mm & 1.4mm & 1.8mm & 2.0mm&2.2mm&6mm
維氏硬度	≥800
密度	>4.0g/cm3
堆積密度	≥2.5g/cm3
說明	經濟便宜，適合濕式研磨

ZS Zirconium Silicate Beads	
Size	0.6mm & 0.8mm & 1.0mm & 1.2mm & 1.4mm & 1.8mm & 2.0mm&2.2mm&6mm
Vickers hardness test	≥800
Density	>4.0g/cm3
Bulk Density	≥2.5g/cm3
Description	Suitable for wet grinding

ZA 氧化鋯珠	
粒徑	0.6mm & 0.8mm & 1.0mm & 1.2mm & 1.4mm & 1.8mm & 2.0mm & 2.2mm & 6mm
維氏硬度	≥ 1050
密度	> 5.4g/cm3
堆積密度	≥2.5g/cm3
說明	單價適中，耐用

ZA Zirconium Aluminium Beads	
Size	0.6mm & 0.8mm & 1.0mm & 1.2mm & 1.4mm & 1.8mm & 2.0mm & 2.2mm & 6mm
Vickers hardness test	≥ 1050
Density	> 5.4g/cm3
Bulk Density	≥2.5g/cm3
Description	Reasonable price , Highly durable

ZC 鈰鋯珠	
粒徑	0.3mm~1.0mm & 1.2mm & 1.4mm & 1.6mm & 1.8mm & 2.0mm & 2.2mm & 2.5mm & 2.8mm & 3.2mm & 4.0mm & 5.0mm & 6.0mm
維氏硬度	> 1150
密度	> 6.1g/cm3
堆積密度	≥3.75g/cm3
說明	奈米適用

ZC Zirconium Cerium Beads	
Size	0.3mm~1.0mm & 1.2mm & 1.4mm & 1.6mm & 1.8mm & 2.0mm & 2.2mm & 2.5mm & 2.8mm & 3.2mm & 4.0mm & 5.0mm & 6.0mm
Vickers hardness test	> 1150
Density	> 6.1g/cm3
Bulk Density	≥3.75g/cm3
Description	Suitable for Nano grinding

ZY 釔鋯珠	
粒徑	0.05mm & 0.1mm~1.0mm & 1.2mm & 1.4mm & 1.6mm & 1.8mm & 2.0mm & 2.2mm & 2.5mm & 2.8mm & 3.2mm & 4.0mm & 5.0mm & 6.0mm
維氏硬度	> 1200
密度	> 6.05g/cm3
堆積密度	≥3.7g/cm3
說明	最高品質研磨介質

ZY Zirconium Yttrium Beads	
Size	0.3mm~1.0mm & 1.2mm & 1.4mm & 1.6mm & 1.8mm & 2.0mm & 2.2mm & 2.5mm & 2.8mm & 3.2mm & 4.0mm & 5.0mm & 6.0mm
Vickers hardness test	> 1200
Density	> 6.05g/cm3
Bulk Density	≥3.7g/cm3
Description	Suitable for Nano grinding , Ultra quality

ARO® 氣動雙隔膜PUMP
ARO® Air Operated Diaphragm Pumps